adTent Vario 3x3 (stelaż+dach)

Resolution: 120 ppi – 1:1 scale

File format: PDF

Color: CMYK - Coated FOGRA39

flattened file (no layers),
no print marks,
no overprint attribute,
no bleeds,
do not change the size of the template ,
convert fonts to curves ,
suggested black color parameters for backlighting: C78 M85 Y90 K100

Remove the red and blue lines before saving the files. Leaving the line on will result in it being printed as a design element! In order to properly display the advertisement, all important elements should be inside the protective area marked with red line. Background and graphics must fill the entire printable area marked project marked with blue line. If there is no fill between the red and blue lines, a white frame will appear on the printout.

Download and work on the graphic design template on the next page of this PDF. If there is more than one, prepare the projects in separate files.

Guideline Label Legend:

Print area

Protection area (place here elements that you want to be uncut, such as logos or text). Remember to remove all lines from the project.

roof

1747 x 1754 [mm]

Print adTent Vario 3x3 - roof

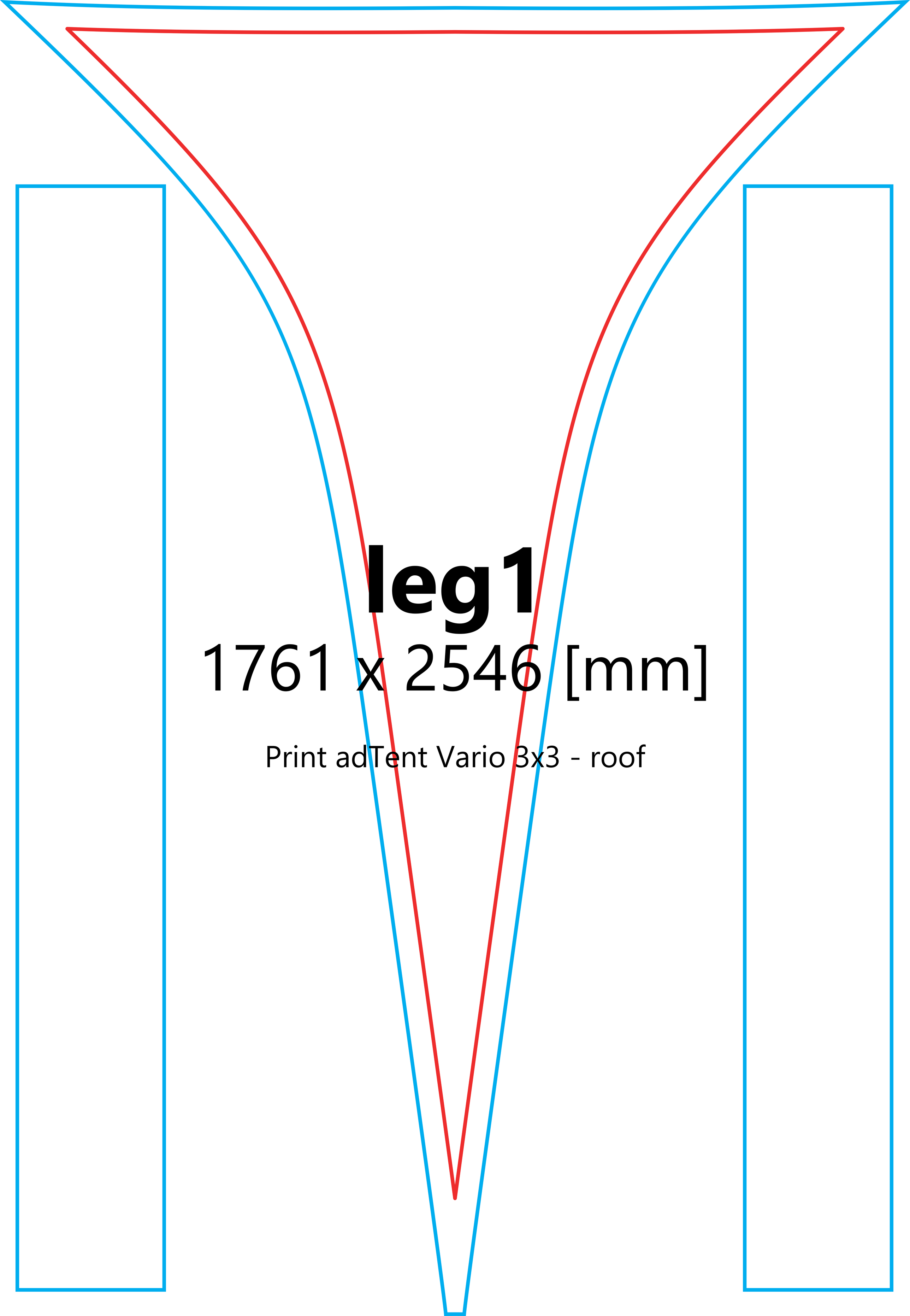
leg1
1761 x 2546 [mm]
Print adTent Vario 3x3 - roof

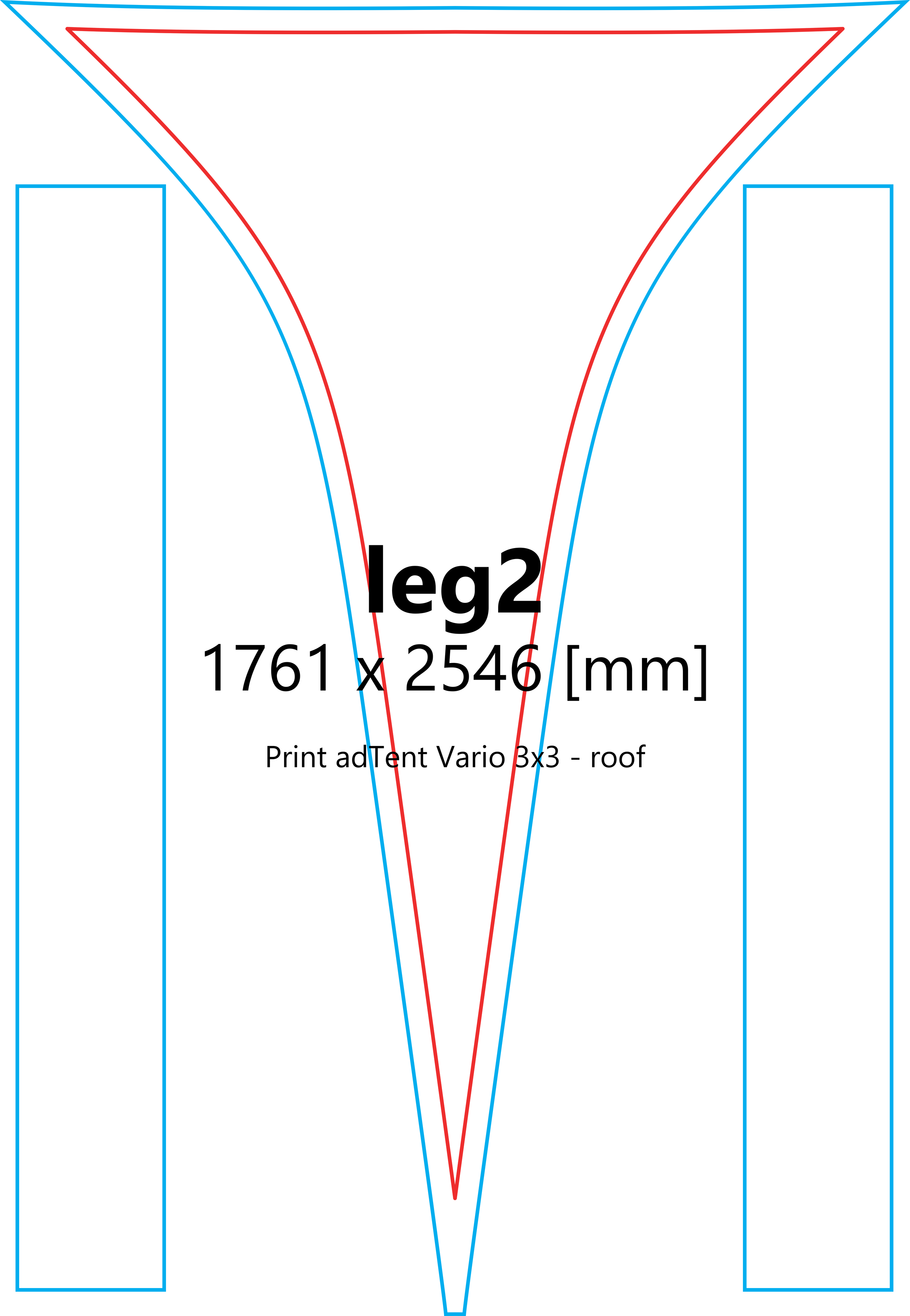
leg2
1761 x 2546 [mm]
Print adTent Vario 3x3 - roof

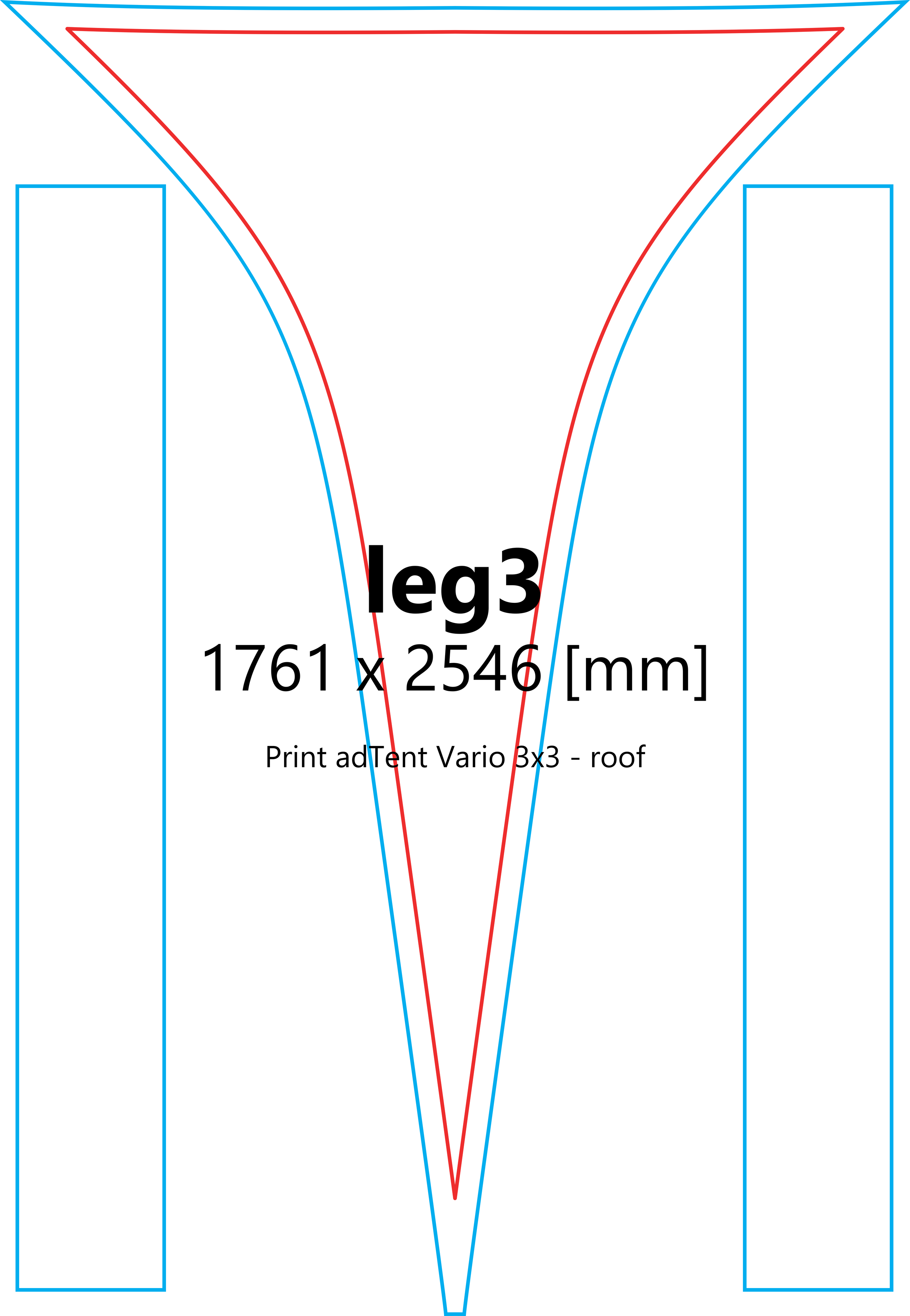
leg3
1761 x 2546 [mm]
Print adTent Vario 3x3 - roof

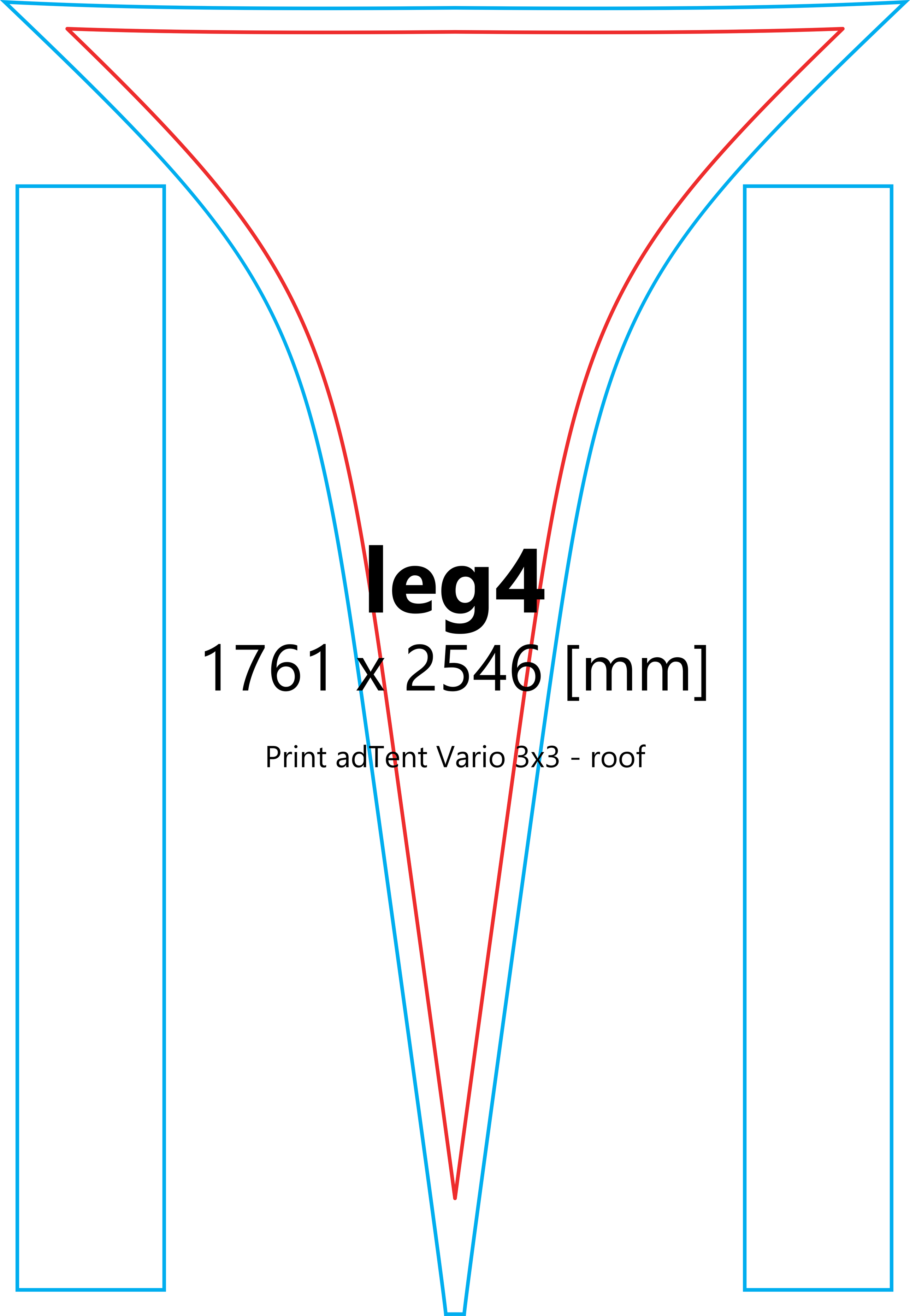
leg4
1761 x 2546 [mm]
Print adTent Vario 3x3 - roof